SHAFT MOUNT
SPEED REDUCER
MODEL # SMR3-25/1

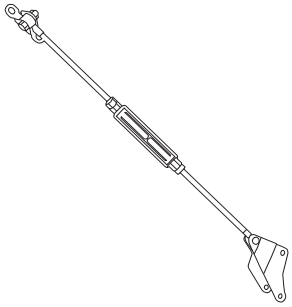

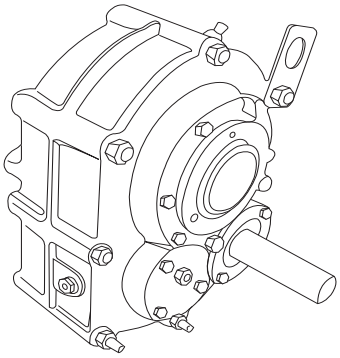

SPECIFICATIONS - Exact Dimensional Drop-In For All Major Makes

Box Size	Ratio	Output Bore
3	25:1	2-3/16" Max.

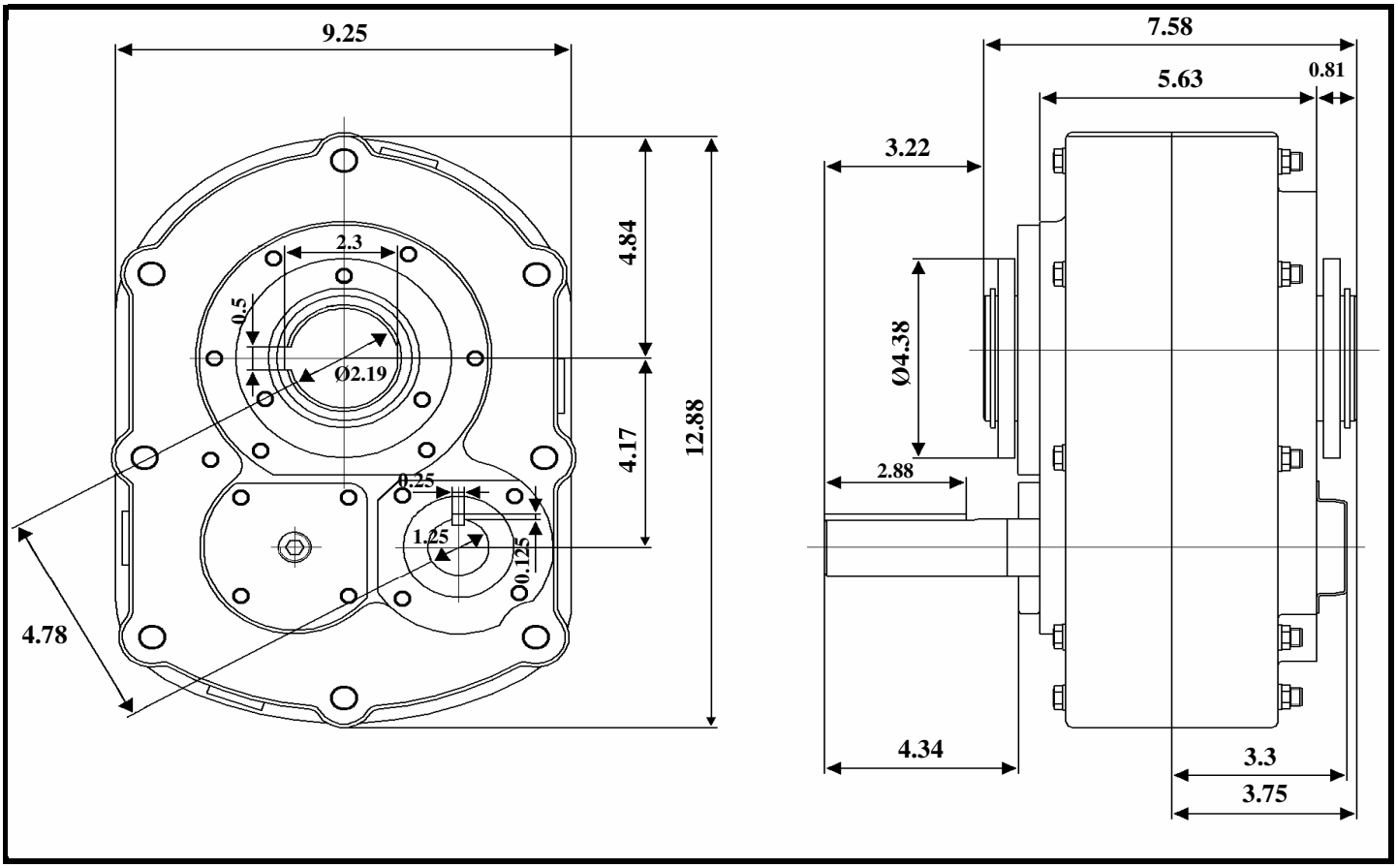

REVISED 08/18/08