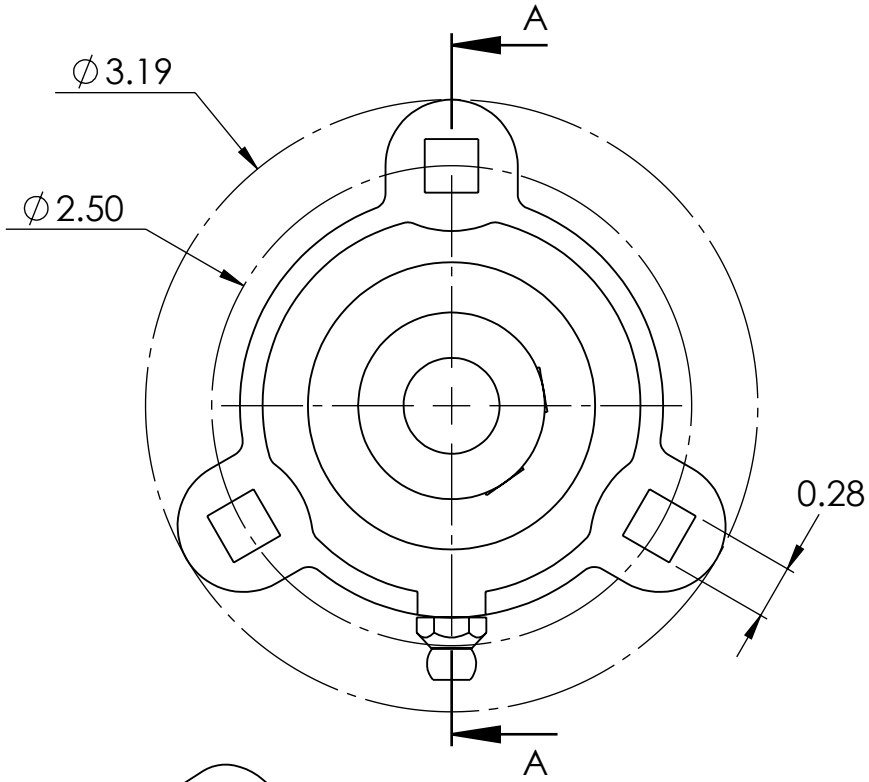

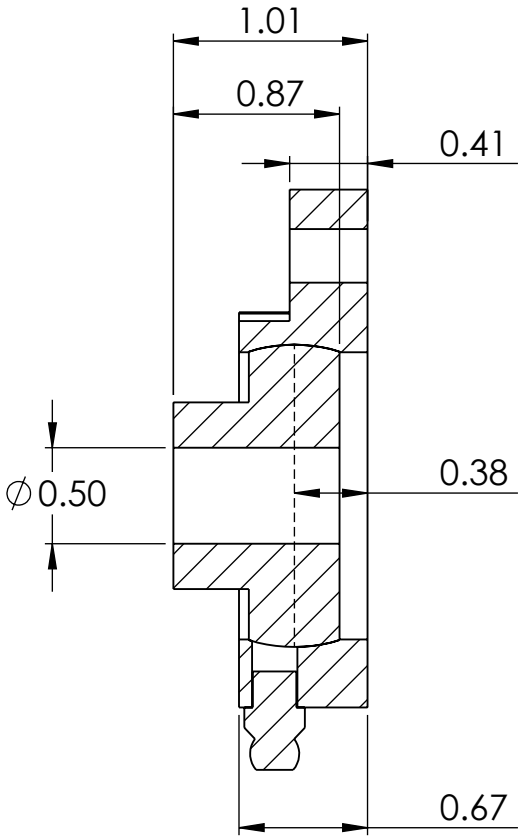

SECTION A-A

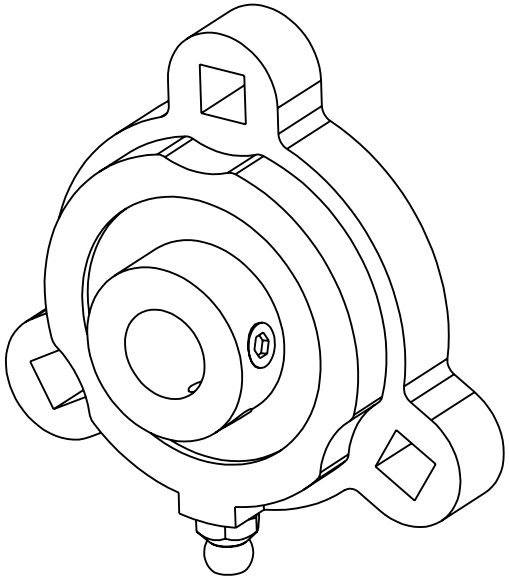

Model #: M2907

SOLVE INDUSTRIAL MOTION GROUP	WEIGHT					
	MATERIAL					
	COATING					
	DRAWN	S.C.	10/26/22			
SIZE A	APPROVED					
PTI INTERNATIONAL	CHECKED			DATE	BY	REVISION DESCRIPTION	REV
	THIRD ANGLE PROJECTION			TITLE:			SCALE 1:1
DWG. NO. S7321	PROPRIETARY AND CONFIDENTIAL			F3X201-8S			REV -

THE INFORMATION CONTAINED IN THIS DRAWING IS THE SOLE PROPERTY OF Solve IMG. ANY REPRODUCTION IN PART OR AS A WHOLE WITHOUT THE WRITTEN PERMISSION OF Solve IMG IS PROHIBITED.